LEVITASK

# Warranty & Assembly Instructions

## VISION X | Folding Armrest

Let's assemble your Vision X together!

# VISION X WITH FOLDING ARMREST

*Knock-down (kd) assembly*

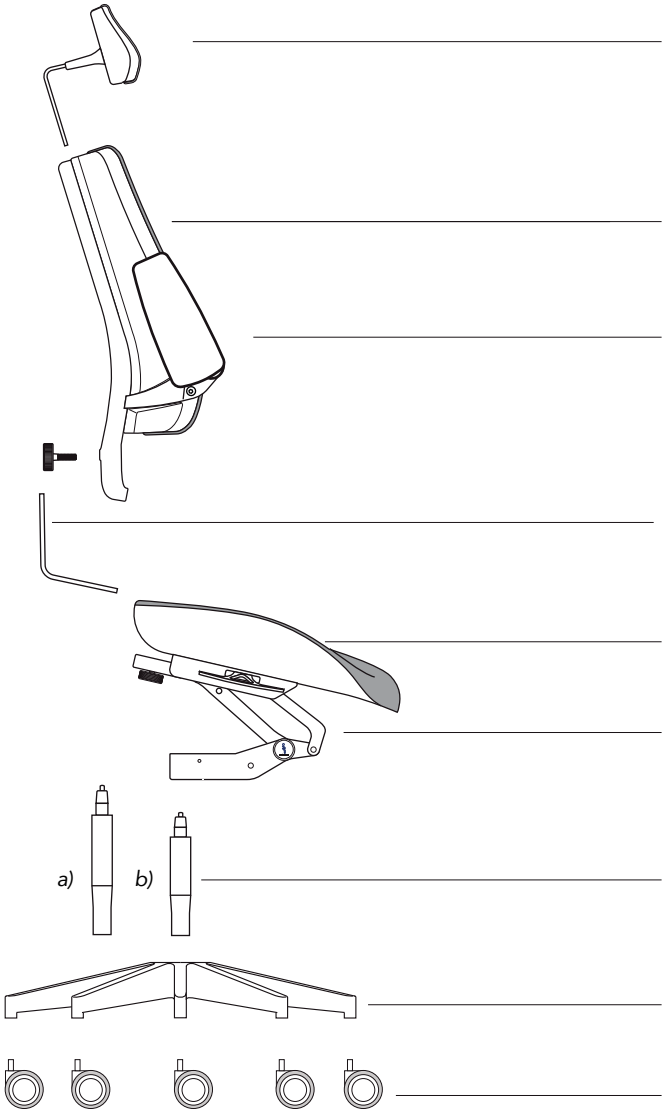


HEADREST

BACKREST

FOLDING ARMREST

J-BAR

SEAT PAN

T-MECH™

STAND PIPES
*a) Long*
*b) Short*

FOOTBASE

CASTORS

# VISION X CHAIR ASSEMBLY SEQUENCE

*No tools required.*

## STEP 1 - CASTORS

Push castors into the base.

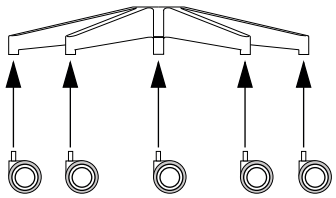

## STEP 2 - STAND PIPE

**Standpipe Selection Guide**

Select the appropriate standpipe based on

| ***a) Long Standpipe*** | ***b) Short Standpipe*** |
|---|---|
| *Recommended for:* | *Recommended for:* |
| *165 – 195 cm \| 5'5" – 6'5"* | *145 – 165 cm \| 4'9" – 5'5"* |

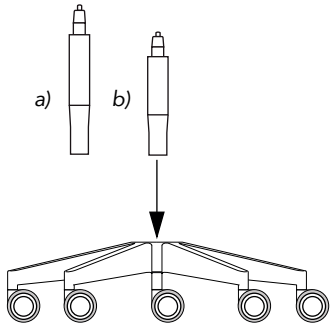


*Note: Individual body proportions vary. These recommendations allow for a ±5 cm (±2") margin to accommodate differences in torso and leg length.*

## STEP 3 - MECHANISM & SEAT PAN

Push mechanism onto top of gas spring.

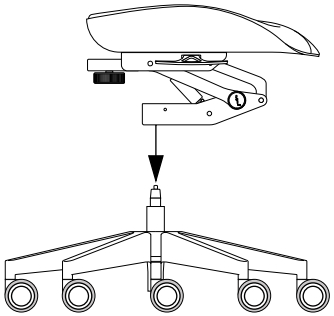



## STEP 4 - BACKREST & MECHANISM

4a Unscrew the lock button
4b Push backrest bracket
4c Into backrest spine.

4d Push backrest bracket into slot of mechanism
4e And lock with knob.

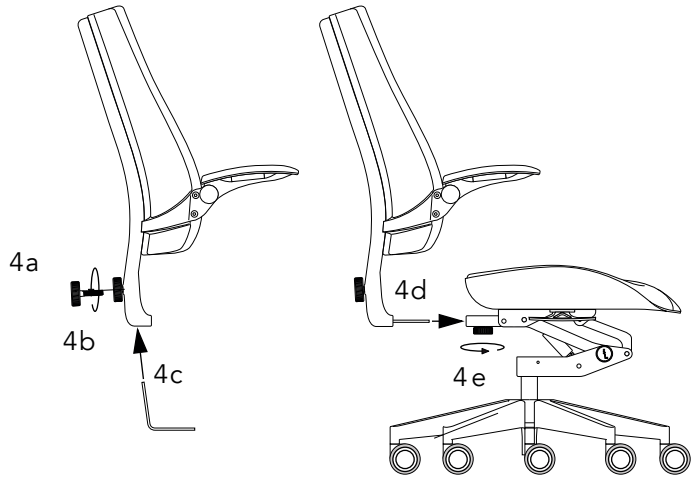


## STEP 5 & 6 - BACKREST & HEADREST

5 Slide the headrest bracket into the spine slot.

6 ELEVATE!

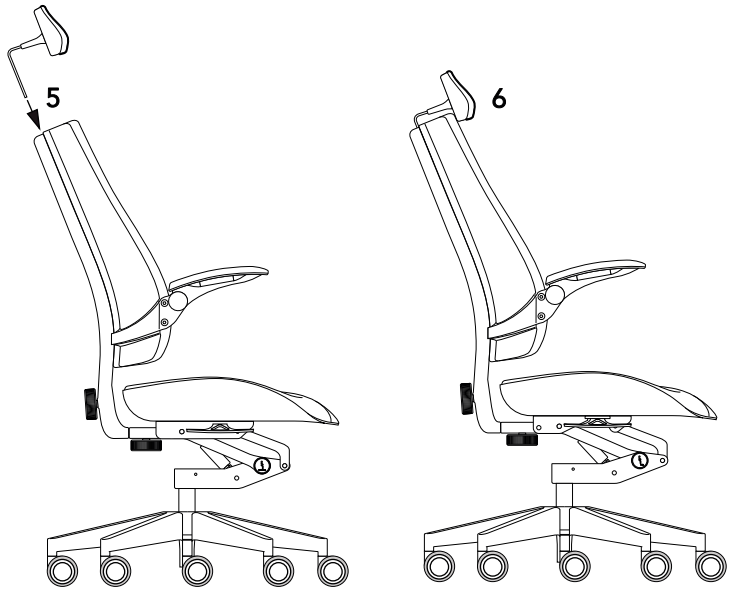

## WARRANTY POLICY

*Our warranty guarantees that your Vision chair will be free from defects in materials and workmanship under normal use, according to the terms outlined below.*

**3 Years**

**Upholstery Warranty**

The upholstery, including fabric or leather, is covered for a period of three (3) years from the date of purchase, protecting against tears, color fading, and craftsmanship defects.

**Recycled PU Armpads**

The PU leather surface of the armpads is covered for a period of three (3) years against craftsmanship defects only. This warranty does not cover cosmetic damage resulting from normal use, such as scratches, scuffs, or indentations.

**How to Make a Warranty Claim.**

1. **Contact Us:** Reach out to our customer service team at **service@levitask.com** with your proof of purchase and a detailed description of the issue, including pictures.
2. **Evaluation:** Our team will evaluate your claim and determine the appropriate course of action.
3. **Resolution:** If your claim is approved, we will replace the defective part or product in accordance with the terms of this warranty.

**10 Years**

**Casters Warranty**

The casters (wheels) are covered for ten (10) years from the date of purchase.

**Five-Star Aluminum Base Warranty**

The sturdy five-star base of the Vision X Chair is covered for ten (10) years from the date of purchase.

**Shell Warranty**

The chair's shell, including the backrest and seat structure, is warranted against defects for ten (10) years from the date of purchase.

**Mechanism Lockable Gas-Spring**

The mechanism lockable gas-spring, which enables forward tilt, is covered for ten (10) years from the date of purchase.

**Mechanism Warranty**

The mechanical components of the Vision chair, including tilt mechanisms and adjustment levers, are covered for a period of ten (10) years from the date of purchase.

**Standpipe Gas-Spring**

The mechanism lockable gas-spring, which enables forward tilt, is covered for ten (10) years from the date of purchase. Date of purchase, protecting against tears, color fading, and craftsmanship defects.

**4D | Folding Armrest Mechanism**

The mechanical functions of the 4D armrests, including height, depth, pivot, and angle adjustments, are warranted against defects for ten (10) years from the date of purchase.



**This Warranty Does Not Cover**

To ensure clarity, the following cases are not covered under this warranty:

***Normal Wear and Tear*** – This includes general wear from regular use over time, which can affect the appearance and function of the chair.

***Damage Caused by Misuse, Abuse, or Neglect*** – Any damage resulting from improper use, failure to follow instructions, or intentional harm.

***Alterations or Modifications*** – Damage or defects resulting from any alterations or modifications made to the chair after purchase.

***Improper Assembly or Maintenance*** – Issues arising from incorrect assembly or lack of proper maintenance as outlined in the product manual.

***Environmental Factors*** – Damage caused by environmental conditions such as exposure to extreme temperatures, humidity, or sunlight.

***Commercial Use*** – If the chair is used in a commercial setting, the warranty period and terms may differ.

***Third-Party Products*** – Any additional products or accessories not manufactured by Levitask, even if packaged or sold with the chair.

***Transportation Damage*** – Any damage that occurs during shipping or transport after the initial delivery.

**Warranty Terms and Conditions.**

This warranty is valid for the original purchaser only and is non-transferable.

The warranty period starts from the date of purchase.

Proof of purchase is required to make a warranty claim.

In the event of a defect, Levitask will, at its discretion, replace the defective part or product.

Dare to Envision